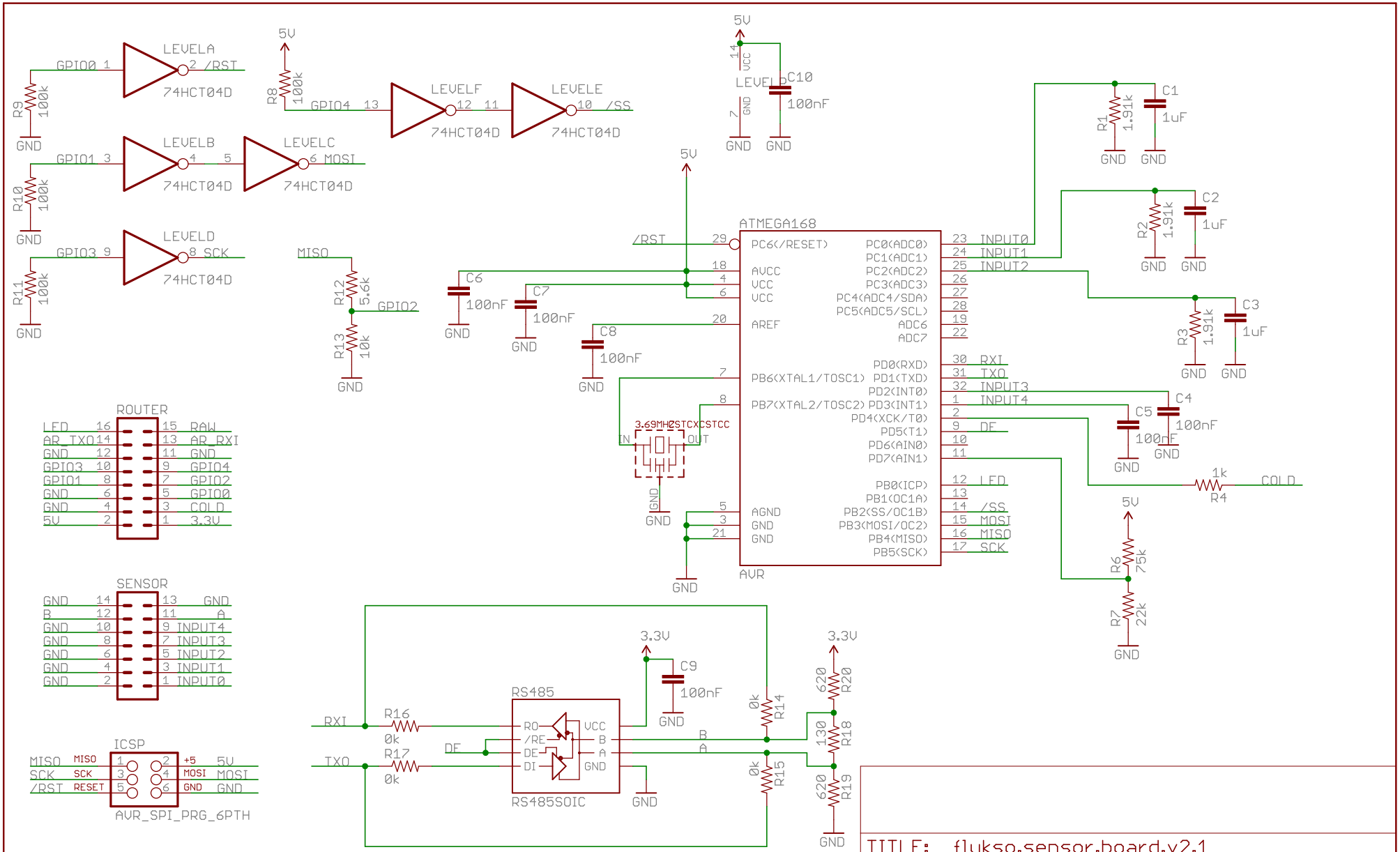

Released under the Creative Commons Attribution Share-Alike 3.0 License
http://creativecommons.org/licenses/by-sa/3.0/

Flukso Sensor Board design by Bart Van Der Meerssche [flukso.net] with love from Fraunhofer ITWM.

TITLE: flukso.sensor.board.v2.1	
Document Number:	REV:
Date: 01/12/10 17:23	Sheet: 1/1